**BODY, DOORS, REAR - Z26S4D92AN/AH/BN/BH (C750617)**

**2026 RZR - RZR PRO S4 ULTIMATE (R01) - Z26S4D92AN/AH/BN/BH**

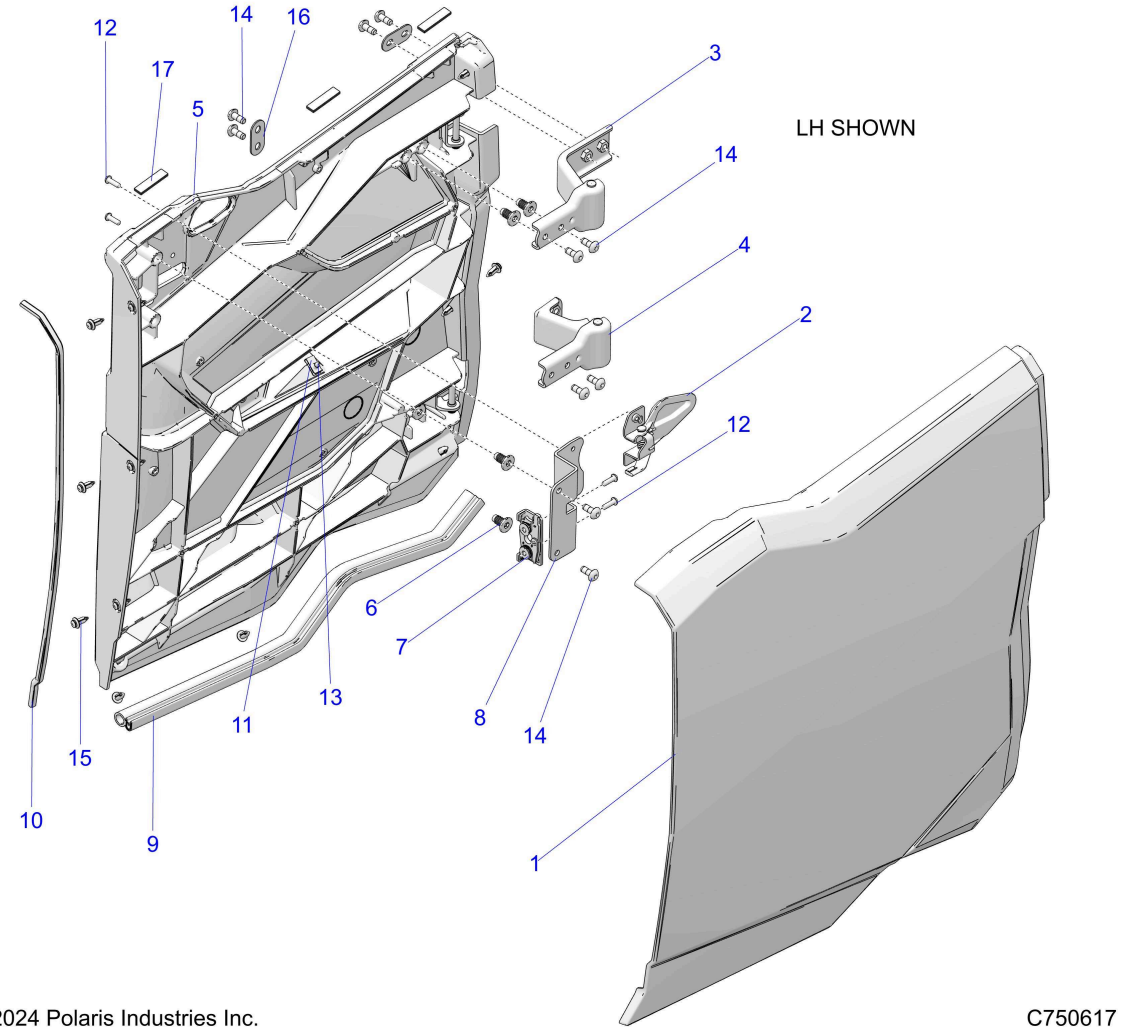


© 2024 Polaris Industries Inc.

C750617

| *Reference #* | *Part#* | *Description* | *Quantity* |
|---|---|---|---|
| 1 | 5465002-A45 | DOOR-SKIN,RR,LH,MP,PNT,E.BL.S [EARTH BLUE SMOKE][AN][[BN] | 1 |
| 1 | 5465002-A29 | DOOR-SKIN,RR,LH,MP,PNT,HWT.GRY [HIDDEN WWARM TONE GREY][AH][BH] | 1 |
| 1 | 5465003-A45 | DOOR-SKIN,RR,RH,MP,PNT,E.BL.S [EARTH BLUE SMOKE][AN][[BN] | 1 |
| 1 | 5465003-A29 | DOOR-SKIN,RR,RH,MP,PNT,HWT.GRY [HIDDEN WWARM TONE GREY][AH][BH] | 1 |
| 2 | 2637530 | ASM-ACTUATOR,LATCH,LH,MP [TO 8/17/2025] | 1 |
| 2 | 2640459 | ASM-ACTUATOR,LATCH,LH,MP [FROM 8/17/2025] | 1 |
| 2 | 2637531 | ASM-ACTUATOR,LATCH,RH,MP [TO 8/17/2025] | 1 |
| 2 | 2640460 | ASM-ACTUATOR,LATCH,RH,MP [FROM 8/17/2025] | 1 |
| 3 | 2639399 | ASM-HINGE,REAR,UPPER,MP | 1 |
| 4 | 2639403 | ASM-HINGE,REAR,LOWER,MP | 1 |
| 5 | 2639616 | ASM-DOOR,INNER,REAR,MP,LH [TO 6/6/2025] | 1 |
| 5 | 2640394 | ASM-DOOR,INNER,REAR,MP,LH [FROM 6/6/2025] | 1 |
| 5 | 2639617 | ASM-DOOR,INNER,REAR,MP,RH [TO 6/6/2025] | 1 |
| 5 | 2640395 | ASM-DOOR,INNER,REAR,MP,RH [FROM 6/6/2025] | 1 |
| 6 | 7548153 | INSERT-M8X1.25,THREADED [TO 2/24/2025] | 8 |
| 6 | 7548170 | INSERT-M8X1.25,THREADED [FROM 2/24/2025] | 8 |
| 7 | 2639731 | ASM-LATCH,DOOR,LH | 1 |
| 7 | 2639732 | ASM-LATCH,DOOR,RH | 1 |

| | | | |
|---|---|---|---|
| 8 | 5274718 | BRKT-DOOR LATCH,MNT,LH | 1 |
| 8 | 5274719 | BRKT-DOOR LATCH,MNT,RH | 1 |
| 9 | 5526552-67 | SEAL-BULB,REAR,DOOR,MP,66.7CM | 1 |
| 10 | 5526551-68 | SEAL-EPDM SPONGE,68.3CM | 1 |
| 11 | 7081305 | CLIP-U SPEED NUT | 1 |
| 12 | 7518616 | BOLT-M6X1.0X20,PH/TX-OLIVE D | 4 |
| 13 | 7519650 | SCR-TXTH-M6X1.0X25 ZFB | 1 |
| 14 | 7519997 | SCR-TXTH-M8X1.25X20 8.8 ZB3 P3 | 10 |
| 15 | 7661855 | RIVET-TUFLOK,.315-.325X.787 | 9 |
| 16 | 5274547 | PLATE-HINGE,ADJUSTMENT | 2 |
| 17 | 8360250 | DUAL LOCK-12.7MMX50.8MM | 3 |

Copyright 1996-2026 Polaris Industries U.S.A All rights reserved.